BCATS

BUILDING, CONSTRUCTION AND ALLIED TRADES SKILLS

Project planning

Assessment resource

Level 2

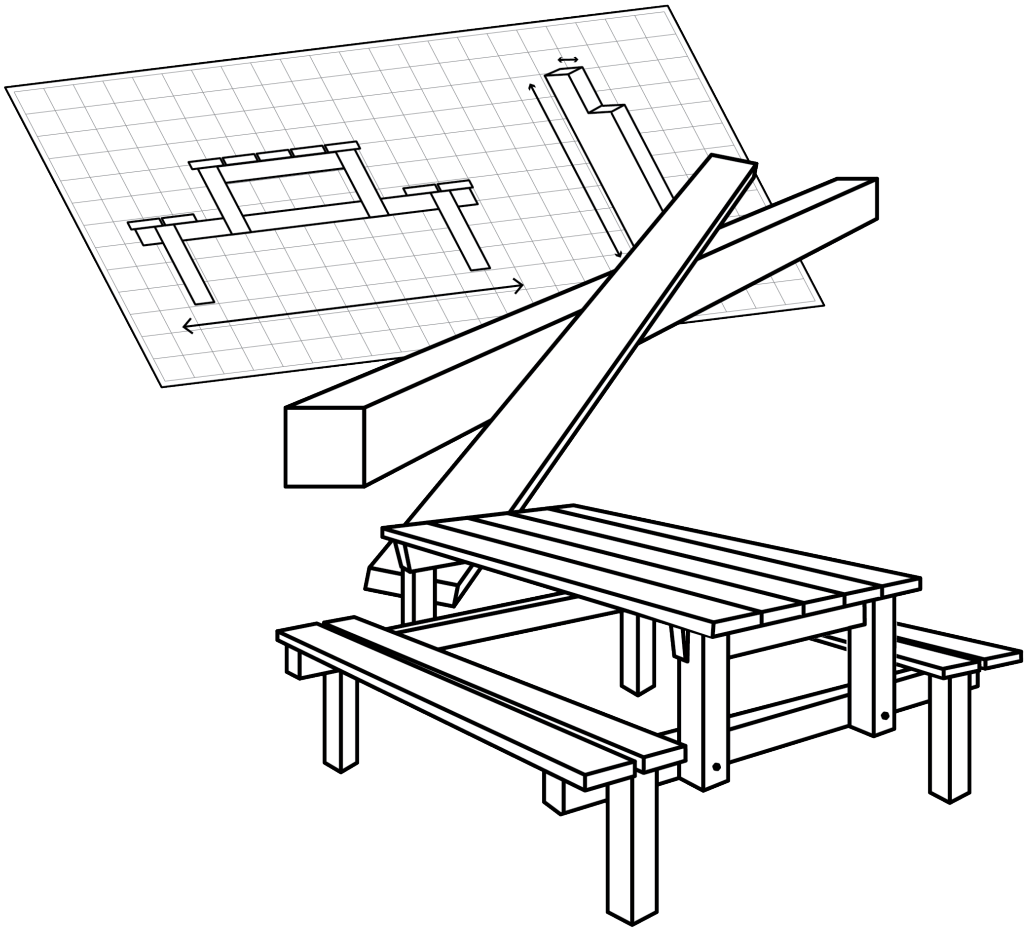

6 credits

Skill Standard 40558 (v1)

Plan and monitor the completion of a BCATS project

Learner name: _____

BCATS project: _____

BCITO
He Hunga Hanga Mātou
building people

Assessment: Project planning

Learner instructions

This assessment is about planning for, monitoring, and evaluating a BCATS project.

You need to show you can do these things without being prompted.

- Create a project plan so you can carry out the project safely and smoothly.
- Monitor the project closely and carry out quality checks to reach a quality outcome.
- Complete a comprehensive evaluation of your skills and areas of improvement for future projects.

The standard will not be signed off until you have completed the project.

Your teacher will observe you monitoring the project and carrying out quality checks. They will provide comments in this assessment resource as evidence to support their observations.

You will need to provide the following evidence to support this. Submit it using myBCITO or the process at your school/organisation.

Completed *Project plan* templates.

Use the assessment checklist in this resource to keep track of the evidence you have collected.

The grade you are awarded will be based on your ability to create an effective project plan, monitor project progress to reach a quality result, and complete a comprehensive project evaluation.

Project plan

For this assessment activity, you need to create a comprehensive project plan, monitor the construction process closely, and evaluate the project without being prompted.

Look at the project brief and explain clearly how you will complete the project.
Fill in the *Project plan* templates with this information.

Describe the project and, if you are working in a group, also include the people in your team and their roles.

Identify the materials and tools you will need to complete it, and any health, safety, and environmental considerations.

List the tasks you need to carry out from start to finish, including any quality checks you might need to make.

Record updates on progress at key milestones.

Complete an evaluation of the project.

Your teacher will observe you monitoring your project and carrying out the quality checks. You must make sure the plan is easy for your teacher to access and for you to update it regularly.

Note: the teacher is required to sign off in the assessment checklist that the project plan was easy to access and regularly updated during project construction.

Assessment checklist: Project planning

To be completed by the learner and the teacher.

Assessment activity	Evidence needed	Date all evidence collected (Learner to complete)	Teacher sign-off
Project plan	Completed *Project plan* templates.		
Teacher confirmation	The project plan was referred to and updated during project construction.		
Note: A copy of the project brief must also be included in your overall portfolio of evidence.			

Teacher observation: Project planning

Learner name: Project:

Teacher instructions

Below are criteria for the available grades.

Not Achieved	Achieved	Merit	Excellence
Planning and monitoring are not completed appropriately for a BCATS project.	Plan and monitor the completion of a BCATS project.	Efficiently plan and monitor the completion of a BCATS project.	Effectively plan and monitor the completion of a BCATS project.

Provide comments on the learner's ability to meet the following assessment criteria, considering everything you observed throughout the project.

Project plan that includes equipment, safety procedures, waste minimisation, project tasks, and quality checks is created.	
Project is monitored and quality checks are completed.	
Evaluation of construction skills and areas for improvement is completed.	

Grade awarded: Project planning

Teacher instructions

After considering all the evidence collected, enter the grade you will award for Skill Standard 40558, with comments that explain your decision.

Final grade		**Date**	
Justification for final grade (Provide overall comments, considering all evidence collected)			

Teacher and learner sign-off

		Date
Learner signature (Grade received and accepted)		
Teacher sign-off	Name: _____ Signature: _____	